Helios Ventilatoren

MONTAGE- UND BETRIEBSVORSCHRIFT
INSTALLATION AND OPERATING INSTRUCTIONS

DE
EN

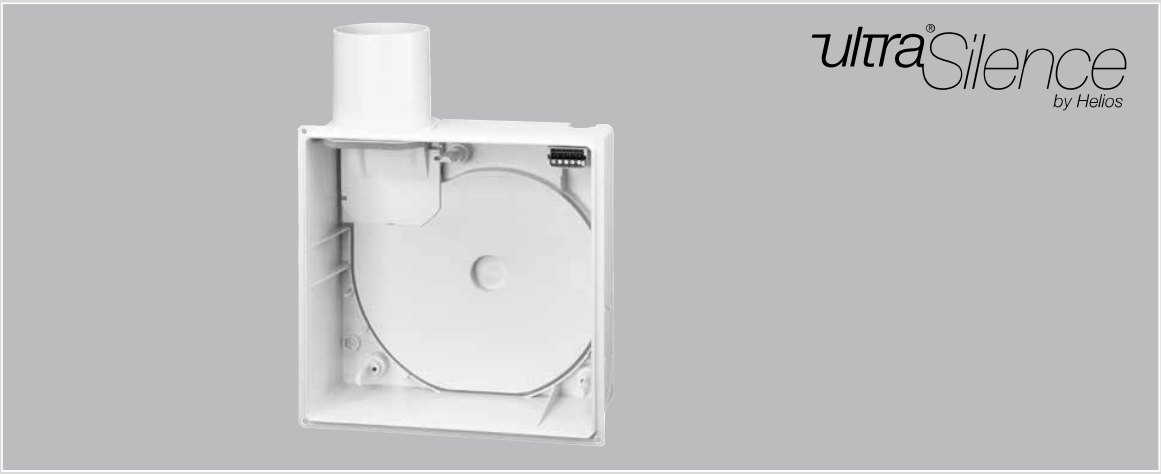

Kunststoffgehäuse ohne Brandschutz
Plastic casing without fire protection

ELS-GU (Unterputz)
(flush-mounted)

Table of Contents

EN

CHAPTER 1

ELS QUICK OVERVIEW

1.0 Type overview of flush-mounted casing

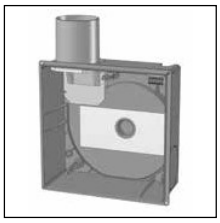

ELS-GU
Flush-mounted casing
Plastic

Ref. no. 8111

PAGE 5

1.1 ELS accessories

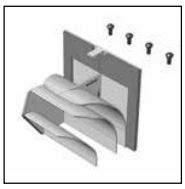

ELS-ARS
Conversion kit for mounting in ELS-V... discharge to back, consisting of guide plate and 4 plastic rivets for metal nozzles.
Ref. no. 8185
PAGE 7

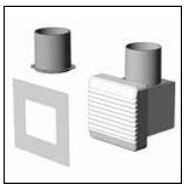

ELS-ZS
Second room kit, consisting of spigots for second room connection, extraction unit and foil insert[1] for air regulation.
Ref. no. 8186
PAGE 8

ELS-WCS
WC extraction kit, consisting of 90° bend with DN 50, reduction DN 40 and 30.

Ref. no. 8191

PAGE 8

ELS-MHU
Mounting bracket, flush-mounted for fixing casing to wall or ceiling.

Ref. no. 8187

PAGE 9

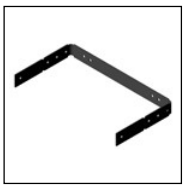

ELS-MB
Mounting holder, for plasterboard and flush-mounted installation. Can be used for all common plasterboard systems
Ref. no. 8188
PAGE 10

ELS-VA
Plasterboard adapter, for retrospective installation in plasterboard

Ref. no. 8189

PAGE 12

ELS-AGR
Spacer frame, for fixing between wall and inner facade, if the flush-mounted casing protrudes over the plaster.
Ref. no. 8193
PAGE 12

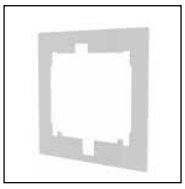

ELS-PB
Plasterboard cover, for covering gaps if casing cutouts have been uncleanly plastered/tiled or if they are too large.
Ref. no. 8194
PAGE 13

ELS-ZAS
Second room connection spigots
required if ELS-ZS is not used.
DN 75/80
Ref. no. 8184

PAGE 8

ELS-ZNE
Electronic overrun timer with variable overrun times
Installation: Flush-mounted box behind switch
Ref. no. 0342
PAGE 16

ELS-ZNI
Electronic interval timer with adjustable interval and overrun times
Installation: Flush-mounted box behind switch
Ref. no. 0343
PAGE 16

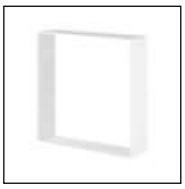

ELS-UPA
Flush-mounted spacer frame for flush-mounted casing. Used when ELS-GU and ELS-GUBA are installed too deep.
Ref. no. 7332

ELS-APASA
Surface-mounted adapter with side inlet for ELS-GU and ELS-GUBA.

Ref. no. 7328

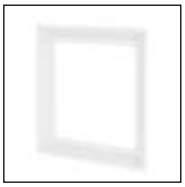

ELS-VSR
Sunken frame for flush-mounted wall and ceiling installation of inner facade, suitable for ELS-GU and ELS-GUBA.

Ref. no. 7322

Caution ⚠

External switches ZNE/ZNI must only be used for single-speed fans V 60 and V100.

NOTE ☞

[1] When using the second room kit **ELS-ZS,** the foil insert must be kept in the flush-mounted box until final assembly!

CHAPTER 2

GENERAL INSTALLATION AND OPERATING INSTRUCTIONS

2.0 Important information

To ensure safety and correct operation please read and observe the following instructions carefully before proceeding. **The electrical connection must be fully isolated from the power supply up to the final assembly!** Once installation is complete, place the installation and operating instructions and accessories for the final assembly in the ELS casing and close the casing with plaster protection cover until the final assembly. After the final assembly, the installation and operating instructions must be issued to the operator (tenant/owner).

2.1 Warning and safety instructions

The adjacent symbol is a safety-relevant warning symbol. All safety regulations and/or symbols must be absolutely adhered to, so that any dangerous situations are avoided.

2.2 Warranty claims – Exclusion of liability

If the preceding instructions are not observed all warranty claims and accommodation treatment are excluded. This also applies to any liability claims extended to the manufacturer.
The use of accessories not offered or recommended by Helios is not permitted. Potential damages are not liable for warranty.

2.3 Regulations – Guidelines

If the product is installed correctly and used to its intended purpose, it conforms to all applicable regulations and CE guidelines at its date of manufacture.

2.4 Receipt

Please check delivery immediately on receipt for accuracy and damage. If damaged, please notify carrier immediately. In case of delayed notification, any possible claim may be void.

2.5 Storage

When storing for a prolonged time the following steps are to be taken to avoid damaging influences:
Sealing of bare parts with anti-corrosion agent, motor protection with dry, air-dustproof packaging (plastic bag with drying agent and moisture indicators). The storage place must be waterproof, vibration-free and free of temperature variations.
When storing for several years or motor standstill, an inspection of the bearings and possible bearing replacement are absolutely necessary before commissioning. Furthermore, an electrical inspection must be carried out according to VDE 0701 and VDE 0530.
When transhipping (especially over longer distances), it must be checked whether the packaging is suitable for the method and manner of transportation.
Damages due to improper transportation, storage or commissioning must be verified and are not liable for warranty.

2.6 Area of application

The units are designed for the ventilation of living spaces, especially sanitary rooms and domestic kitchens according to DIN 18017, pt.3. In case of operation under difficult condition, e.g. high humidity, longer standstill periods, heavy contamination, excessive strain due to climatic influences (e.g. operating temperature > 40 °C) as well as technical and electronic influences, consultation and approval is required, since the series is not suitable for this. The entire fan corresponds to protection category IPX5 (jet-water protection), protection class II and it may be installed in zone 1 wet rooms according to VDE 0100 pt. 701.
The unit must only be used according to its intended purpose!

2.7 Performance data

The unit must be installed correctly with correctly designed extract air ducting and sufficient supply air flow to achieve the optimum performance.
When using a vented fire place (chimney) in a ventilated room, there must be sufficient supply air for all operating conditions (consult chimney sweep).
Different versions and unfavourable installation and operating conditions can lead to a reduction of output. In accordance with DIN 18017, pt. 3, the flow rate for the simultaneous operation of multiple fan units in a line and caused by external influences may be up to 15 % below the planned flow rate.
The catalogue noise levels are A-rated sound power levels L_{WA} (according to DIN 45 635 pt.1). Data in A-rated sound pressure L_A contain room-specific properties. These significantly affect the adjusting noise.

NOTE ☞

Information on duct systems for ventilation systems with common extract air ducts

The ventilation system must be designed according to DIN 18017, pt. 3. The extract air lines consist of the connecting lines for the fans and the common extract air line (main line). The line section above the highest unit connection is described as the discharge line and must be vented via the roof.
Extract air lines must be leak-proof, stable and made from fireproof material class A according to DIN 4102 for more than two full floors. They must be provided or thermally insulated so that no condensation damage occurs. A sufficient number of cleaning openings with leak-proof closures must be positioned so that the extract air lines can be cleaned easily. Screwable cleaning openings are not permitted.

The main line should be straight and vertical with a constant cross-section. In case the main line is not vertical, it must be mathematically verified that the requirements according to DIN 18017, pt.3, section 3.1.3 are fulfilled. When meas-

uring the main line, it is required that all fans are simultaneously operated at full output. Throttle devices are not permitted.
The diameter of the main line can be determined from the dimensioning diagram (Helios main catalogue). In this respect, it should be noted that there are increased pressure losses for a discharge line length over 1.5 m and a floor height over 2.75 m, which must be compensated for with a larger main line cross-section.
The Helios ELS software can be used for dimensioning. Available via the Helios website: **www.heliosventilatoren.de.**
Maximum two ELS fan units per floor can be connected to a common main line. The ventilation of other rooms in an apartment must not take place via the same fan that is used to ventilate the bathroom and toilet. Observe minimum bending radius of connecting lines R = DN.
The design and installation of ventilation system must comply with the building acoustics regulations (DIN 4109 sound insulation in building construction).

NOTE ☞

2.8 General information

a.) If the casings are used in highly resonant lining boards (e.g. chipboard, gypsum or fibre silicate boards), then the transmission of structure-borne sound must be prevented with elastic spacers.

b.) Supply air feed: Each room for ventilation must have a non-closable air vent opening of 150 cm^2 free cross-section.

WARNING ⚠

2.9 Electrical connection

The unit must be fully isolated from the power supply before all maintenance and installation work or before opening the terminal compartment! The electrical connection must only be carried out by an authorised electrician according to the information in the enclosed wiring diagrams.
Observe the yellow label stick in the casing!
The relevant standards, safety regulations (e.g. DIN VDE 0100) and the technical connection regulations of the energy supply companies must be observed. An all-pole mains switch/isolator, with at least a 3 mm contact opening (VDE 0700 T1 7.12.2 / EN 60335-1) is mandatory. The rated voltage and frequency must be consistent with the information on the type plate. The power cable must be introduced so that, in case of water exposure, water entry along the power-supply cable is impossible. The cable must never be placed over sharp edges. The units are protection type IPX5 (jet water-proof) and correspond to protection class II.

The electrical connection is carried out at the connection terminals in the casing. The corresponding wiring diagram for the respective fan type and casing must be observed. A control unit parallel to the light is recommended in rooms without windows (exceptions: ELS-VF, ELS-VP).
The electrical connection must be fully isolated from the mains power supply until final assembly!

2.10 Spare parts

Spare permanent filter ELF-ELSD — **Ref. no. 8190**
Spare filter Packaging unit: 2 pcs, washable

Spare air filter for second room intake unit ELS-ZS — **Ref. no. 3042**
1 kit = 5 pcs

NOTE ☞

Spare filters can be ordered online at **www.ersatzluftfilter.de**

2.11 Approval

General technical approval, DIBt (German Institute for Structural Engineering).
Approval number: **Z-51.1-193**

CHAPTER 3

ELS SCOPE OF DELIVERY AND ASSEMBLY

3.0 **ELS-GU plastic casing without fire protection**
– suitable for installation in buildings without fire protection requirements pursuant to LBO (regional building code).
– suitable for installation in buildings with fire protection requirements pursuant to LBO in conjunction with the installation of fire damper ELS-D.

3.1 **Scope of delivery / Packaging unit,** Fig.1

ELS-GU Flush-mounted casing Fig.1

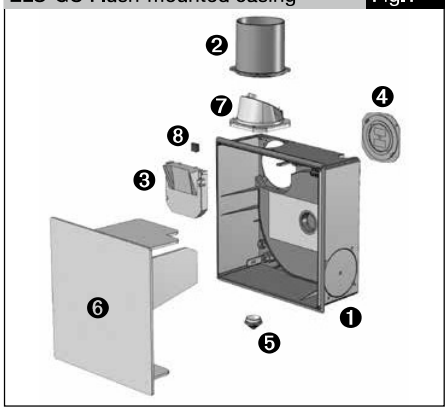

❶ **Flush-mounted casing ELS-GU** with electrical plug connection
❷ **Discharge spigot** convertible
❸ **Ramp**
❹ **Backdraught shutter** convertible with bayonet lock
❺ **Cable grommet**
❻ **Plaster protection cover** against contamination
❼ **Valve casing** with airtight backdraught shutter
❽ **Balancing weight**

CHAPTER 4

INSTALLATION

4.0 **Installation location / position**

Fig.3

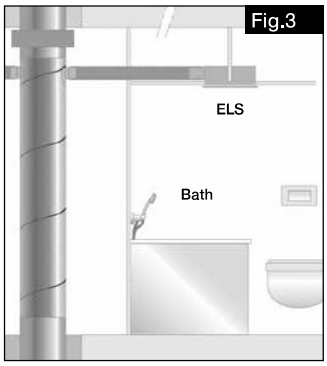

Fig.5

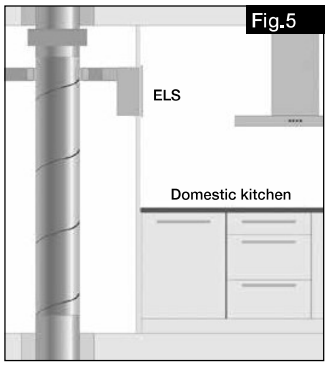

Fig.6

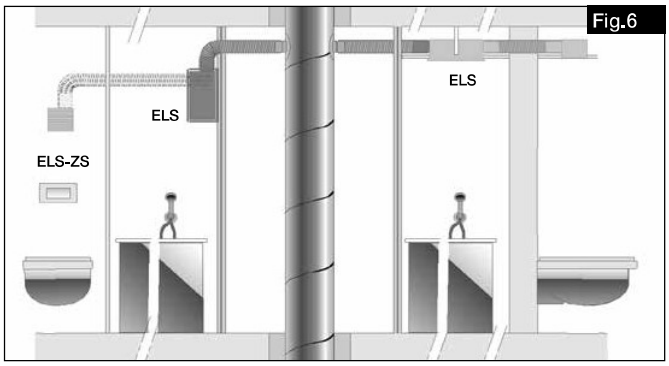

NOTE ☞

If the ELS casings are used in highly resonant lining boards (e.g. chipboard, gypsum or fibre silicate boards), then the transmission of structure-borne sound must be prevented with elastic spacers.

A distance of 20 cm from the ELS casing to the wall and ceiling is recommended for the side inflow.

EN

ATTENTION ⚠

4.1 **Fitting position** (turned left or right by 90°).
Turn valve casing with backdraught shutter by 90°.
The balancing weight must be applied in all modified fitting positions.

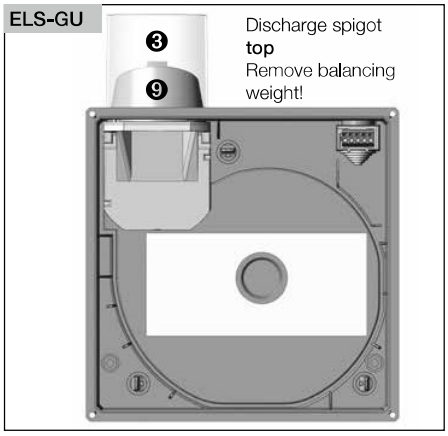

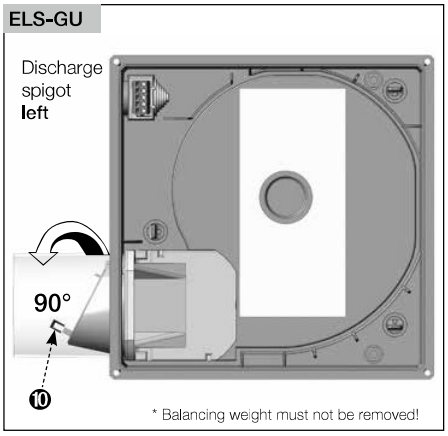

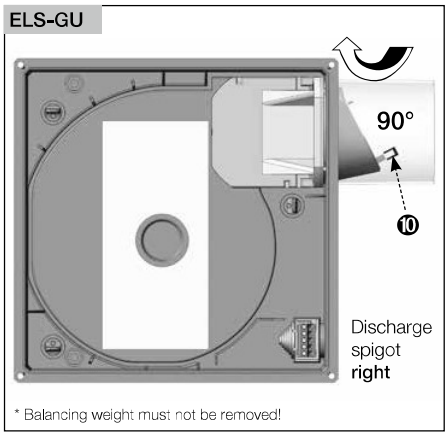

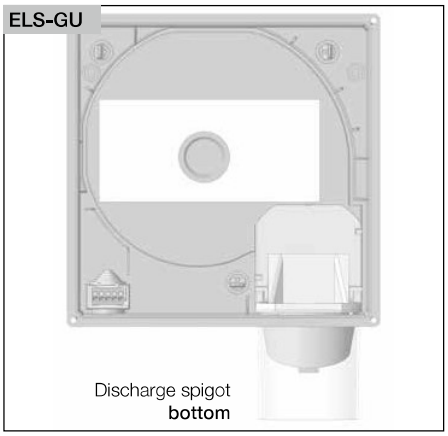

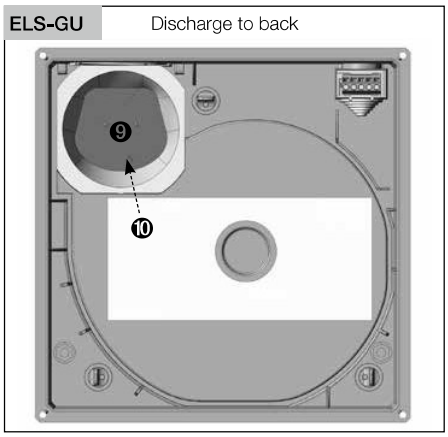

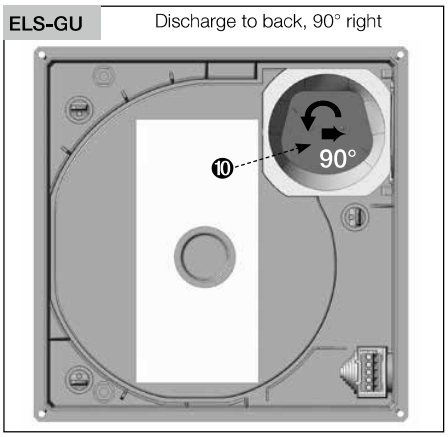

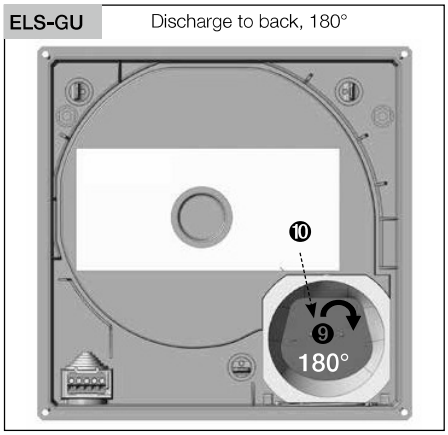

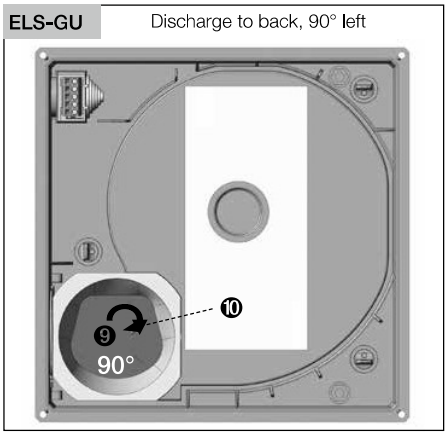

NOTE

4.2 Conversion ELS-GU, discharge to back

- **Accessory ELS-ARS required.** ELS-ARS is required for final assembly of spiral insert. Keep in flush-mounted casing if provided.
- Ramp (Position ->) has no other use!

Fig.7

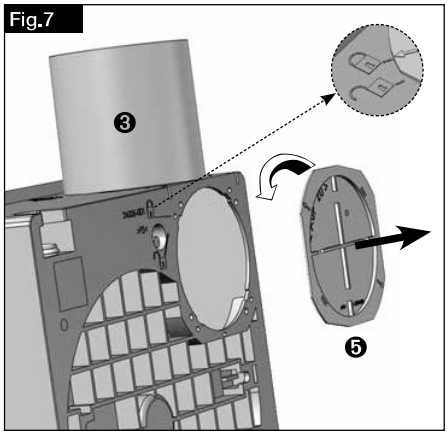

Fig.8

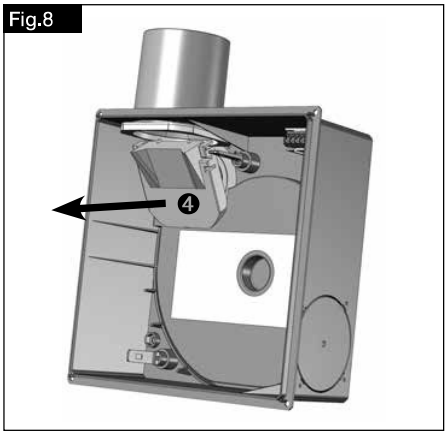

Fig.9

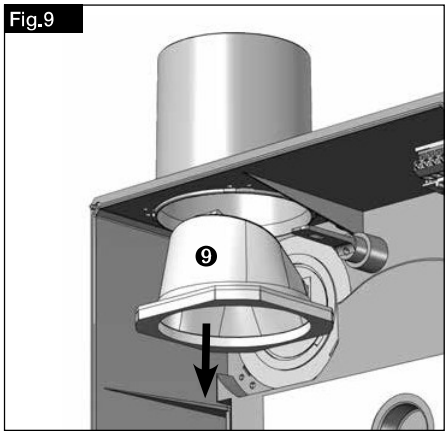

Fig.10

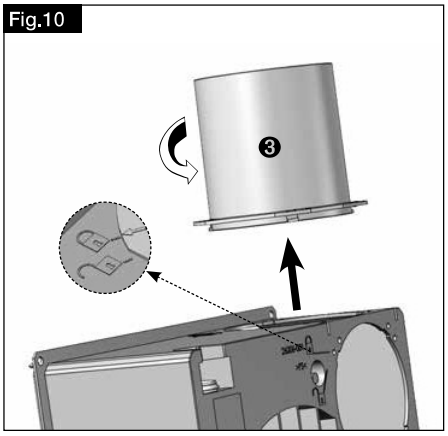

Fig.11

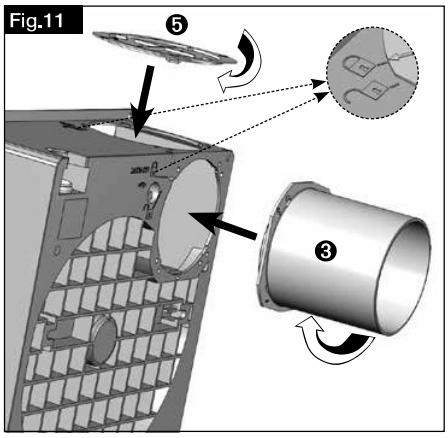

Fig.12

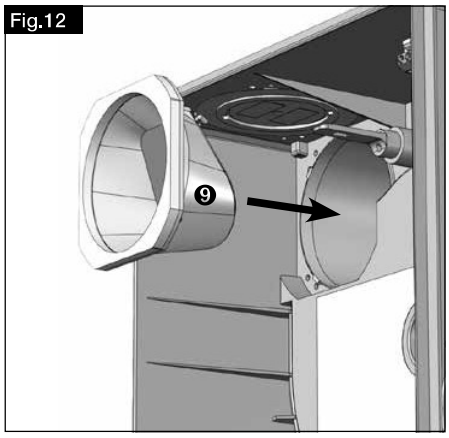

EN

NOTE

4.3 Conversion Second room connection
- Accessory ELS-ZS or ELS-ZAS required.
Seal and make connection duct Aluflex/Steelflex DN 80 airtight.

Fig.13

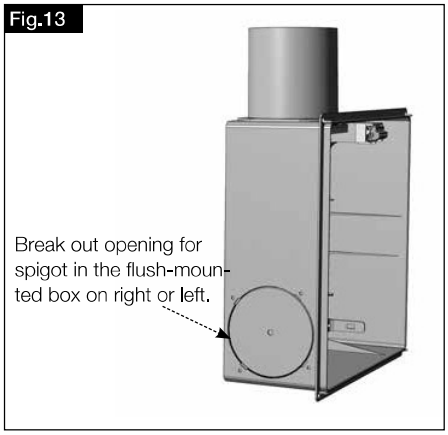

Fig.14 ELS-GU.. Discharge to top, Connection for second room on left or right.

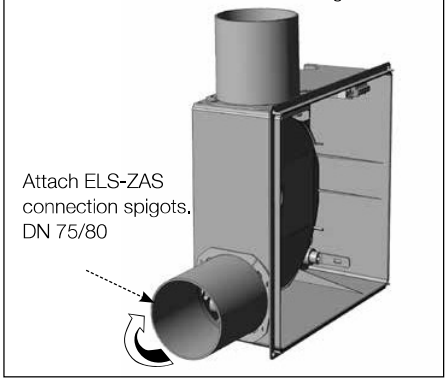

ATTENTION

4.4 Conversion WC extraction
- Accessory ELS-WCS or ELS-ZAS required, depending on connection duct used.
Local regulations must be considered for the WC installation situation (Fig. 17)!
Cistern with junction at flush pipe required.
The flush pipe can also be swapped on the construction site! Speak with your cistern supplier.

Fig.15

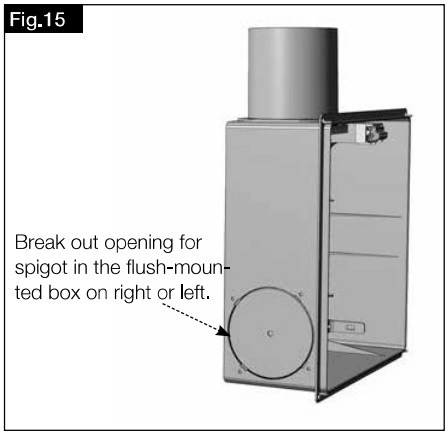

Fig.16

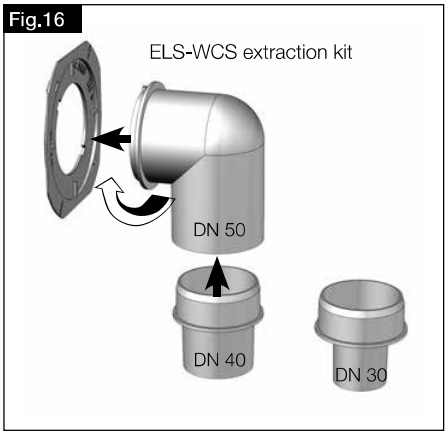

NOTE

NOTE:
The foil insert from ELS-ZS could be used appropriately to adjust the air volume (consult factory).

Fig.17

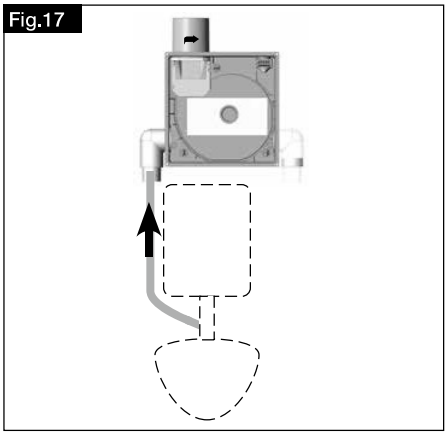

4.5 Install mounting bracket ELS-MHU for flush-mounted casing

Required for flush-mounting of ELS-GU in shaft, in case of thin brick linings, cladding or ceiling.

Scope of delivery:

① Wall bracket
② Side bar
③ Mounting bracket
④ 2x hexagon head screw M6 x16
⑤ 2x hexagon nut M6
⑥ 4x screws M6x10 (self-tapping)

NOTE ☞

Wall-plugs, screws are not provided by Helios!

Fig.18

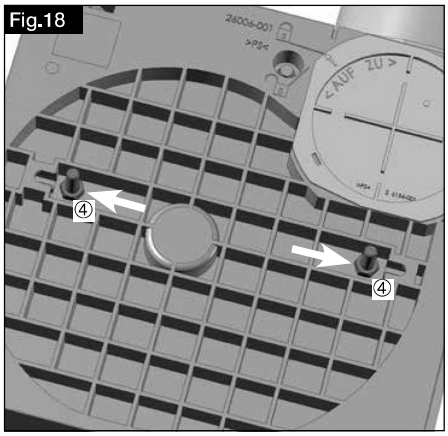

Fig.19

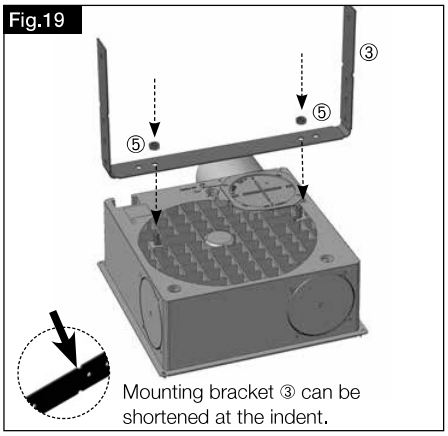

Fig.20

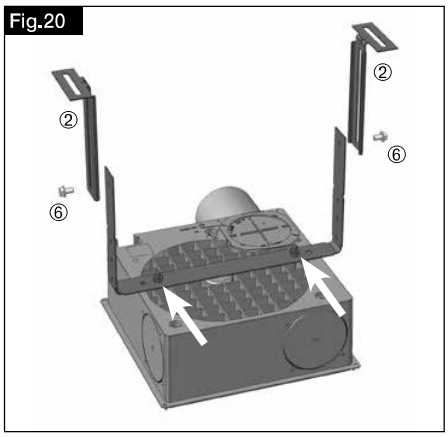

Fig.21

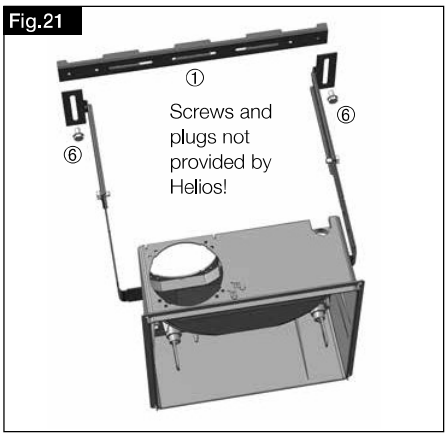

Fig.22

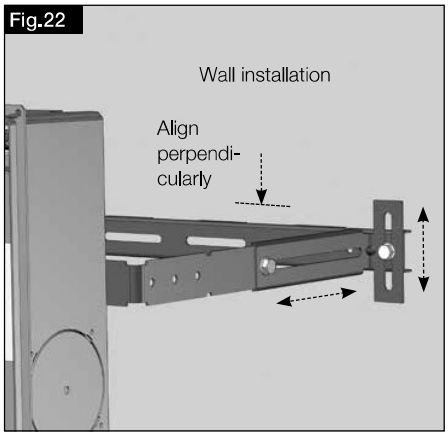

Fig.23

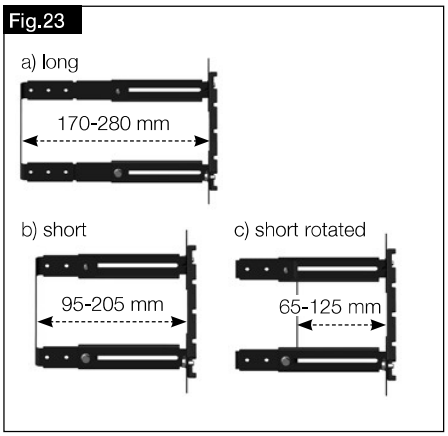

EN

4.6 Install mounting holder ELS-MB for plasterboard systems

Scope of delivery:
① Mounting holder
④ hexagon head screw 2x
⑤ hexagon nut 2x

Wall-plugs, screws are not provided by Helios!

NOTE

Fixing to plasterboard systems takes place with plasterboard system specific brackets or wall holders (Pos a.).

Fig.24

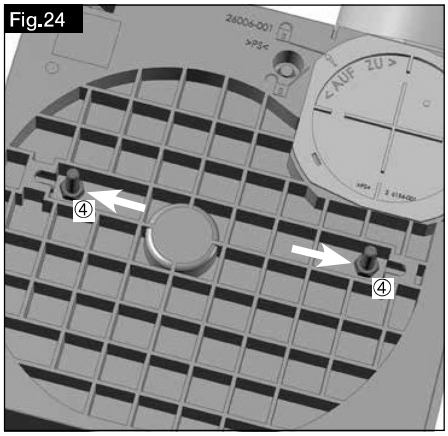

Fig.25

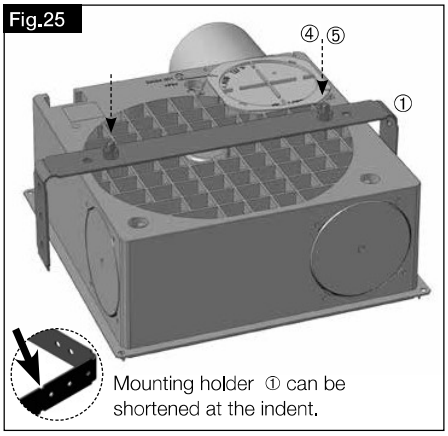

Fig.26

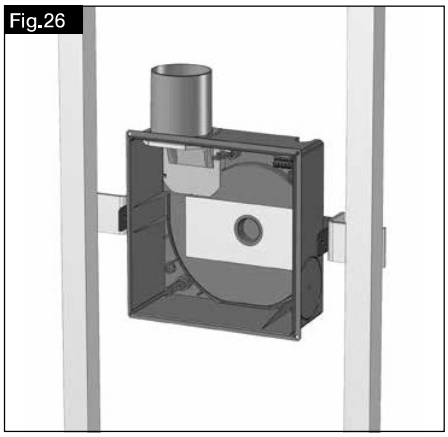

Fig.27

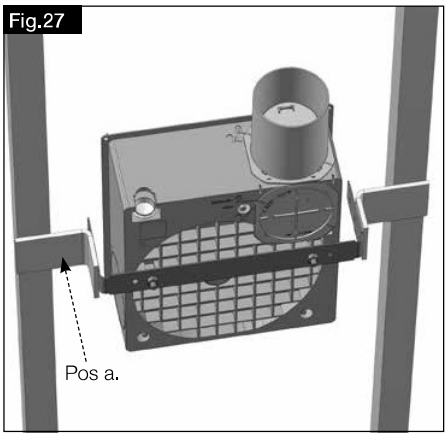

Fig.28

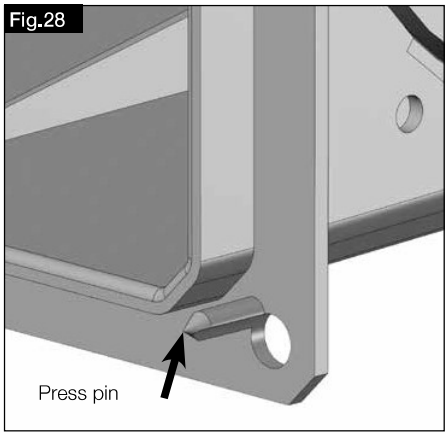

Fig.29

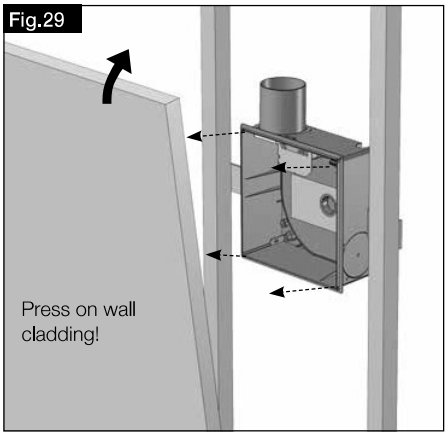

4.7 ELS installation description for cladded wall

Fig.30

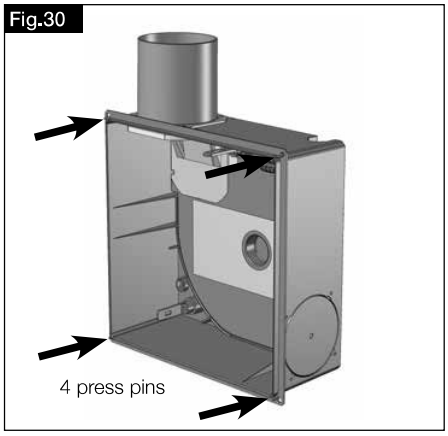

Fig.31

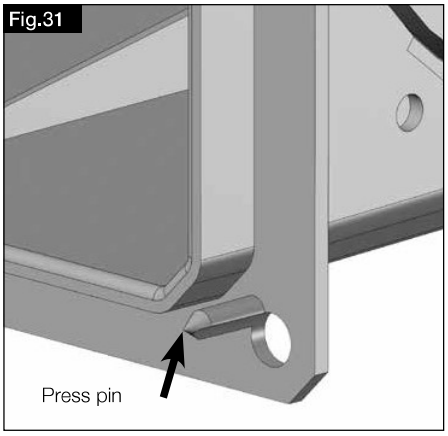

Fig.32

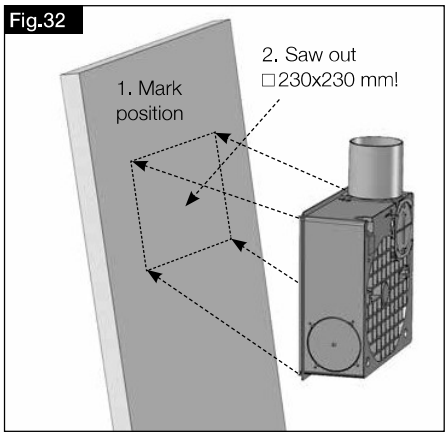

Fig.33

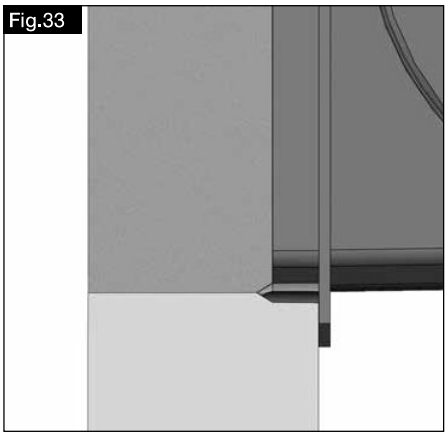

Fig.34

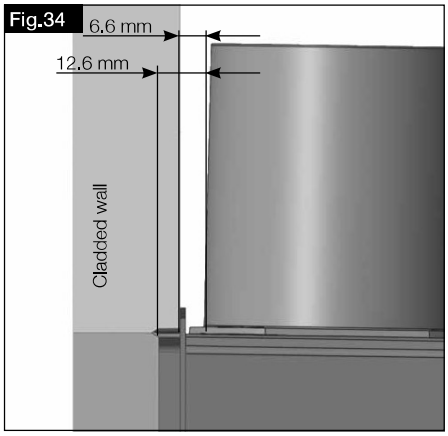

Fig.35

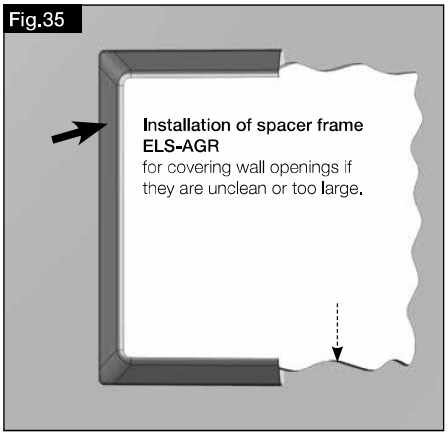

EN

4.8 **Install plasterboard adapter ELS-VA and spacer frame ELS-AGR to ELS-GU**
Installation: Plasterboard adapter **ELS-VA** to front-side flush-mounted casing insert in cladded sanitary walls.
Kit consists of plasterboard adapter and four plastic screws.

Fig.36

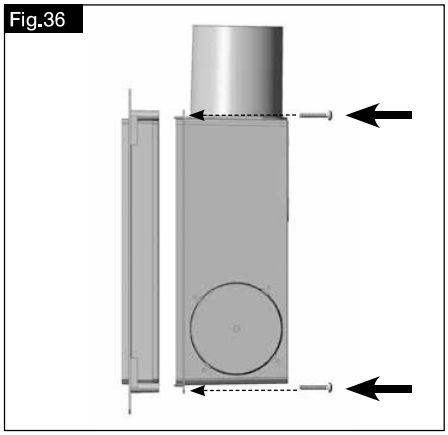

Fig.37

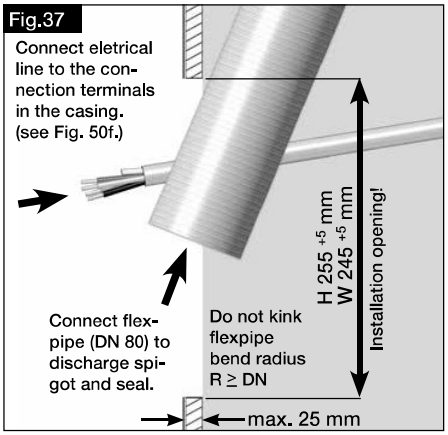

Fig.38

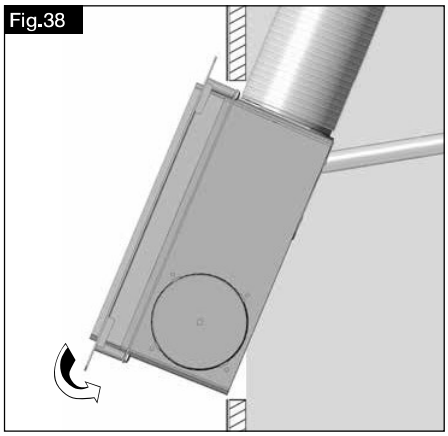

Fig.39

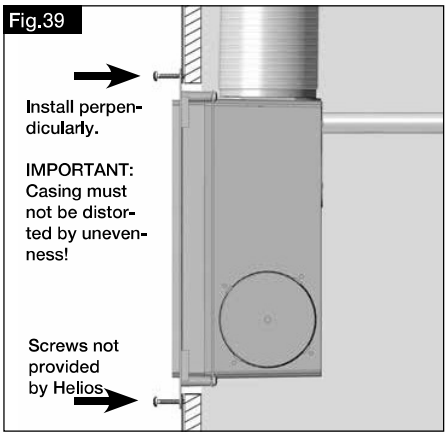

Fig.40

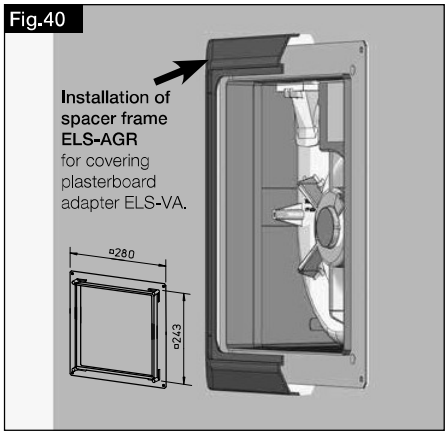

Fig.41

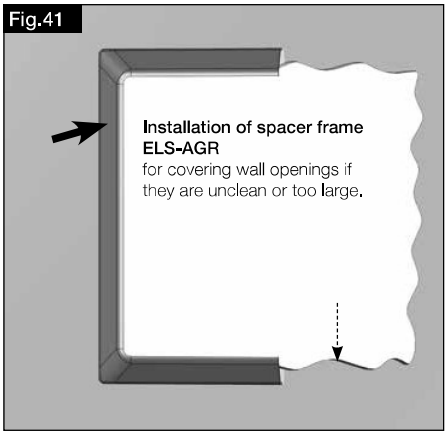

Fig.42

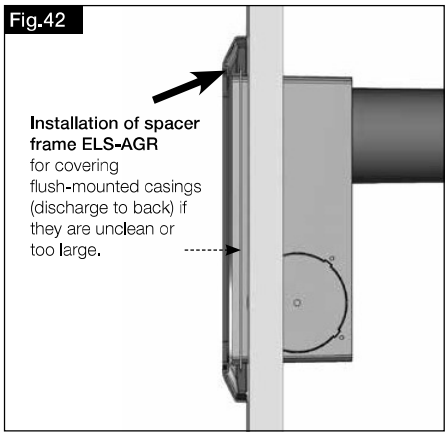

Fig.43

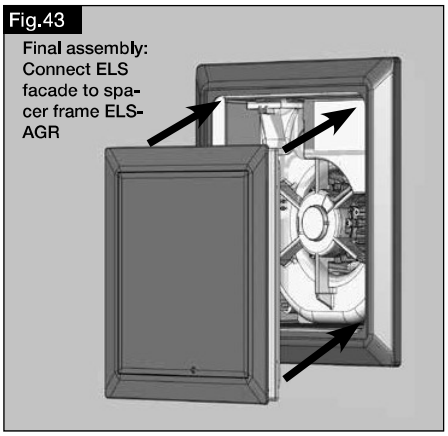

4.9 Installation of plasterboard cover ELS-PB

The ELS-PB plasterboard cover is used for covering gaps in case of casing cut-outs which have been uncleanly plastered, tiled or if they are too large, which cannot be completely covered by the inner facade.
The plaster cover is fixed between the wall/ceiling and ELS inner facade.

Fig.44

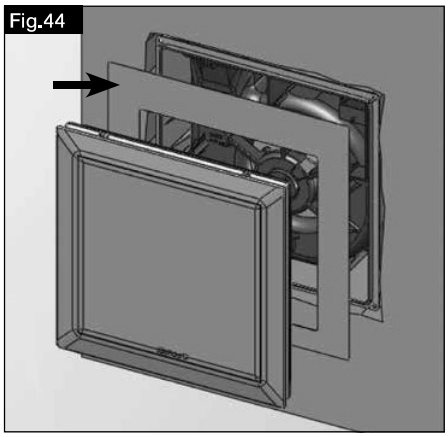

Fig.45

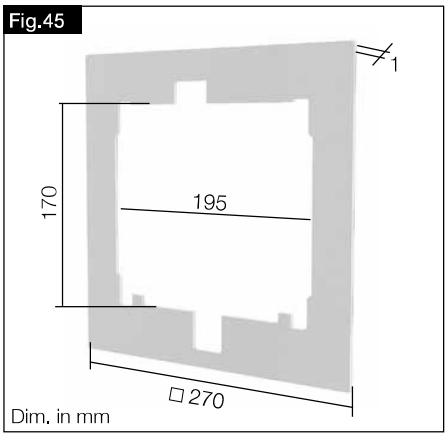

4.10 Wall / ceiling installation ELS-GU...

NOTE ☞

Precisely align desired position and firmly tighten fixing elements. In case of lightweight ceilings, insert sound-insulating material between ceiling and flush-mounted casing.

Wall installation:

Fig.46

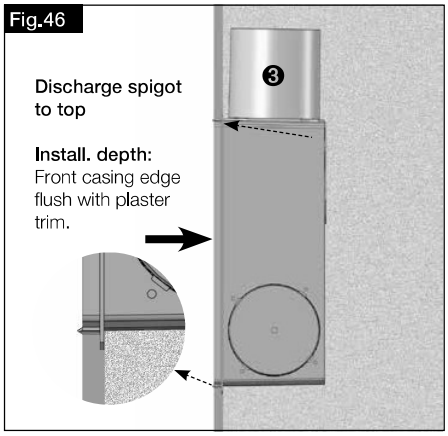

Fig.47

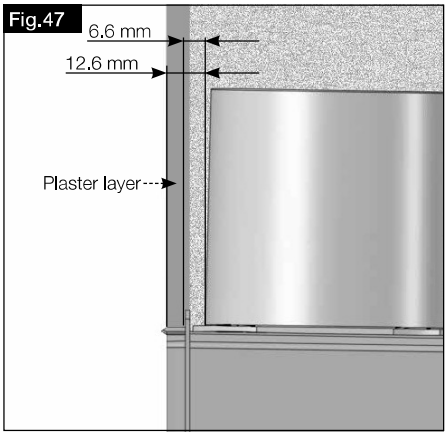

Ceiling installation:

Fig.48

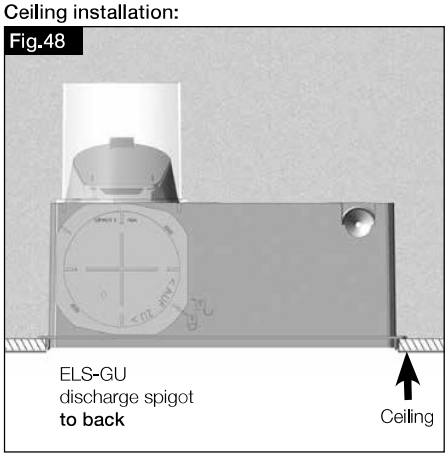

Fig.49

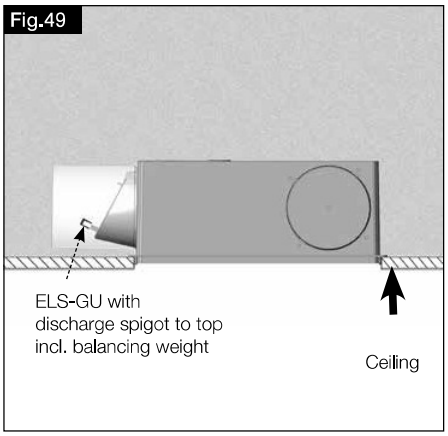

EN

4.11 Connecting duct (Aluflex ducting)

NOTE

Observe bending radius R ≥ DN of the connection cable!

Fig.50

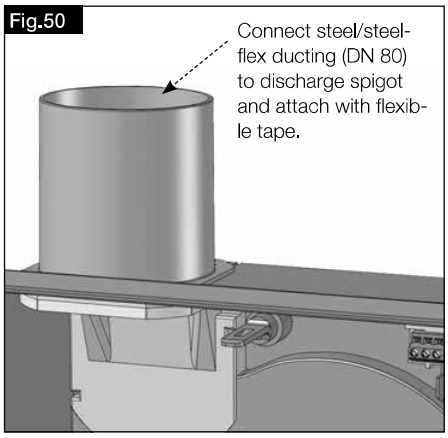

Fig.51

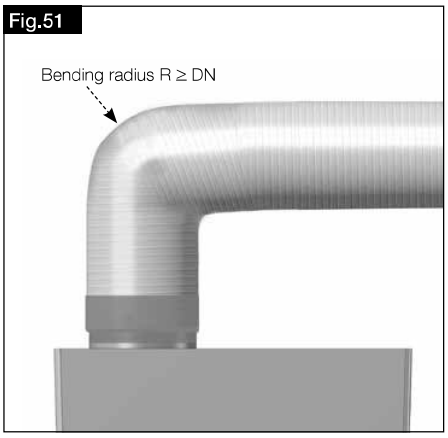

4.12 Connection cable

NOTE

NOTE: Cut circular grommet according to relevant electrical supply line or ductwork. IP protection is only achieved when the cable grommet is air-tight with the cable or ductwork inserted!

Fig.52

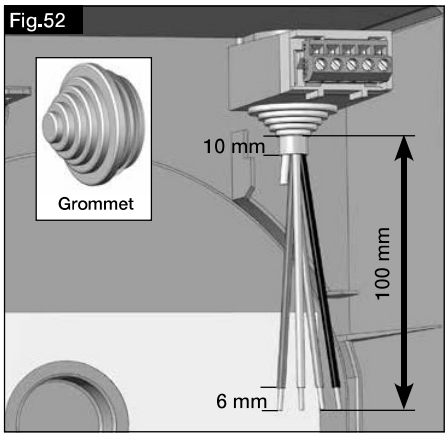

Fig.53

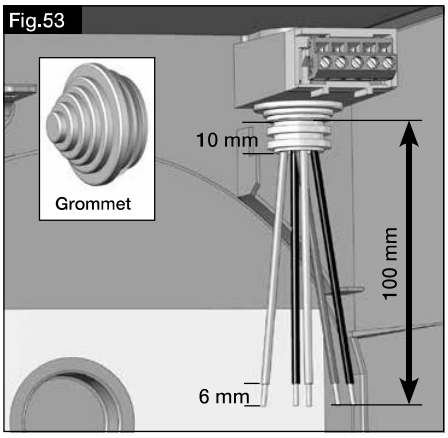

The connection cable must be stored so that water cannot penetrate along the cable in case of water exposure. The cable must not pass over sharp edges!

WARNING

The electrical connection must be isolated from the mains power supply until final assembly!
The relevant standards, safety regulations (e.g. DIN VDE 0100) and the technical connection regulations of the energy supply companies must be observed. An all-pole mains switch/isolator, with at least a 3 mm contact opening (VDE 0700 T1 7.12.2 / EN 60335-1) is mandatory. The rated voltage and frequency must be consistent with the information on the type plate.

The accessory parts and installation and operating instructions must be placed in the ELS casing and closed away with the cleaning protection cover when assembly is complete!

IMPORTANT NOTE

EMC regulation/standard
Important note for the electromagnetic compatibility
The interference resistance according to DIN EN 55014-2 depends on impulse form and energy share 1000 V to 4000 V. In case of operation with fluorescent tubes, switching power supplies, electronically controlled halogen lamps, etc., these values may be exceeded. In this case, additional anti-interference measures on-site are required (L, C or RC modules, protective diodes, varistors).

5.0 Wiring diagram overview for ELS V.. fan series (please mark applicable wiring diagram for the intended fans!)

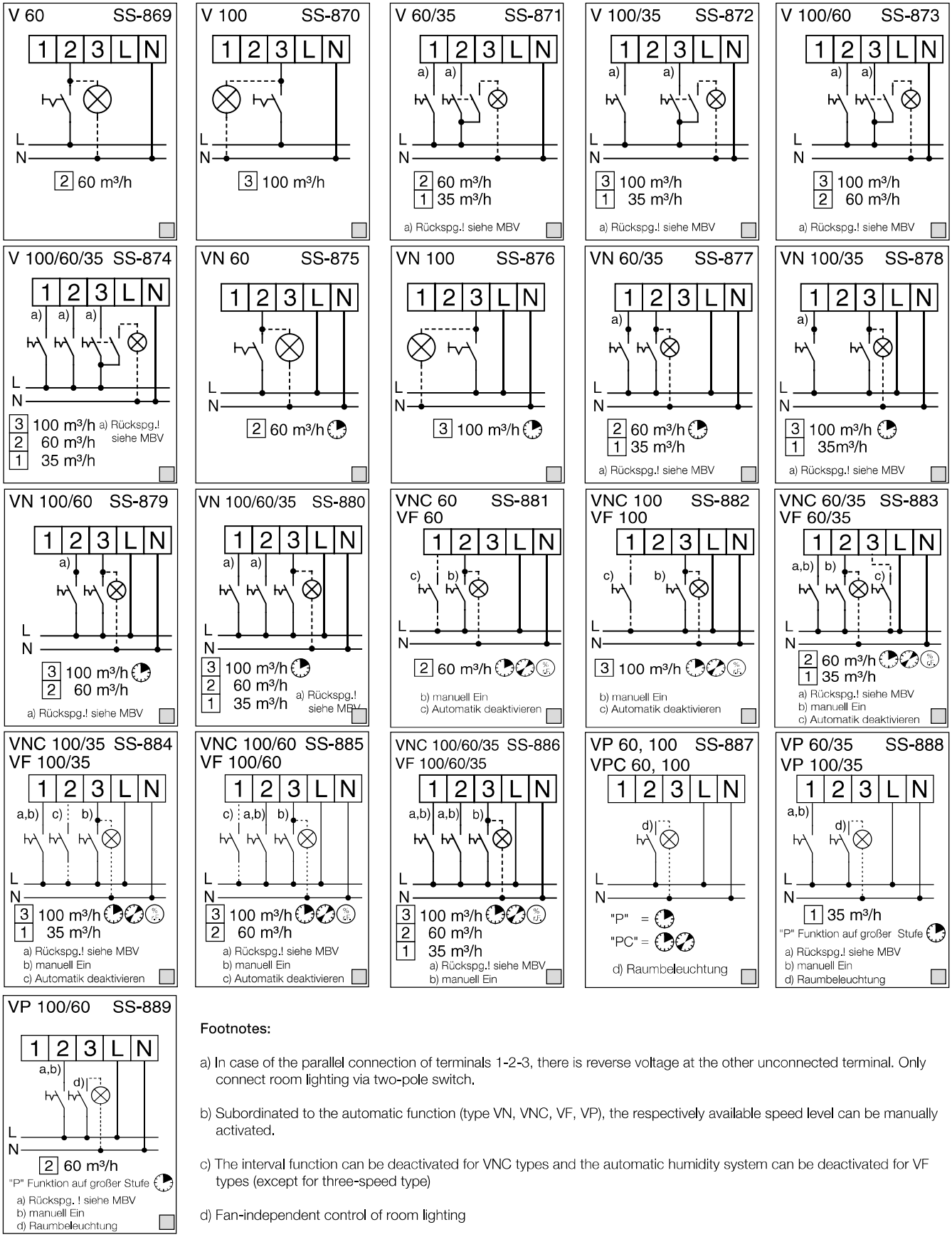

Footnotes:

a) In case of the parallel connection of terminals 1-2-3, there is reverse voltage at the other unconnected terminal. Only connect room lighting via two-pole switch.

b) Subordinated to the automatic function (type VN, VNC, VF, VP), the respectively available speed level can be manually activated.

c) The interval function can be deactivated for VNC types and the automatic humidity system can be deactivated for VF types (except for three-speed type)

d) Fan-independent control of room lighting

EN

5.1 Wiring diagram overview for ELS V..

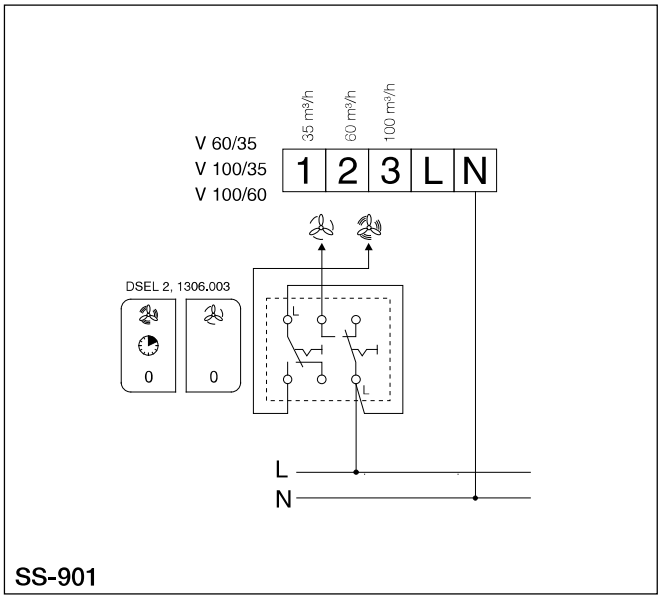

SS-901

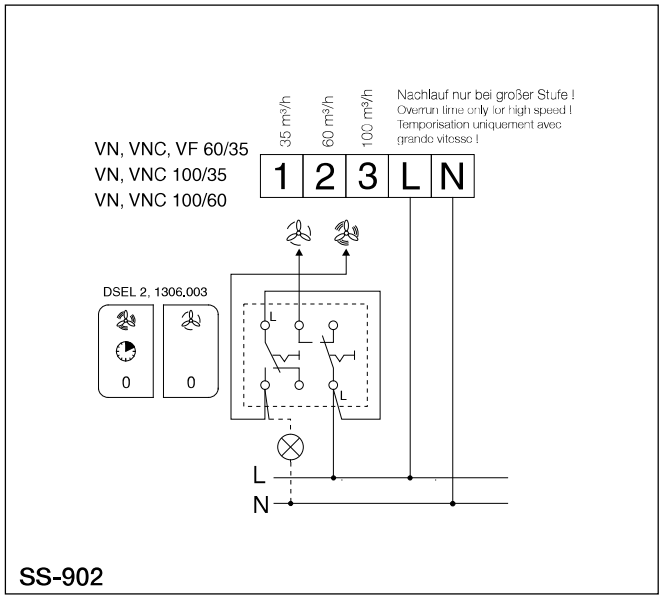

SS-902

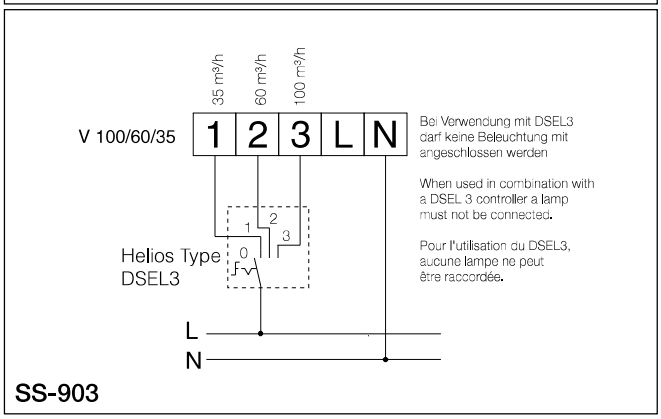

SS-903

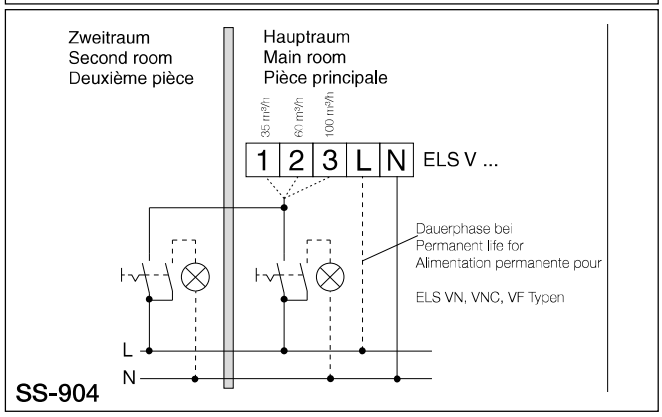

SS-904

Vorsicht !! Attention !!

Externer ZNE/ZNI dürfen nur bei eintourigen V-Ventilatoreinsätzen V 60 und V 100 eingesetzt werden. Beim Einsatz des ZNE/ZNI/ZT mit mehreren Lüftern, muß pro Lüfter ein separater ZNE/ZNI/ZT eingesetzt werden.
Direkte Parallelschaltung von mehreren Lüftern ist nicht erlaubt.

External ZNE/ZNI timer may only be connected on ELS-V fans V 60 and V 100 with one speed.
If used in combination with a number of fans, each fan needs its own ZNE/ZNI/ZT timer.
The wiring of ELS-V fans in parallel is not permitted.

Pour tous types ELS-V à une vitesse un temporisateur extérieur ZNE/ZNI peut être connecté à un V 60 et V 100. Il est nécessaire d'installer un temporisateur ZNE/ZNI/ZT pour chaque ventilateur utilisé. Le branchement en parallèle de plusieurs ventilateurs est interdit.

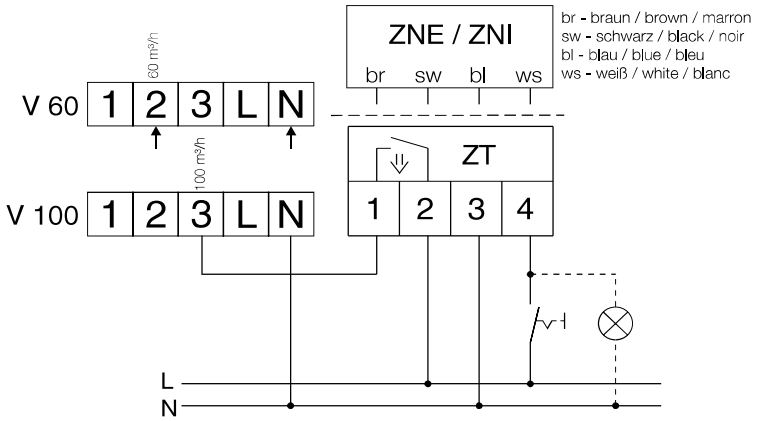

SS-905

5.2 Wiring diagram overview for ELS EC.. fan series (please mark applicable wiring diagram for the intended fans!)

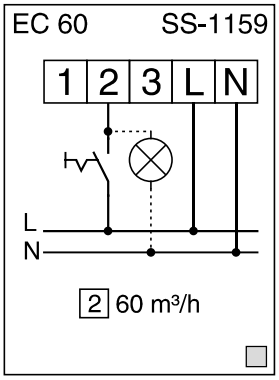

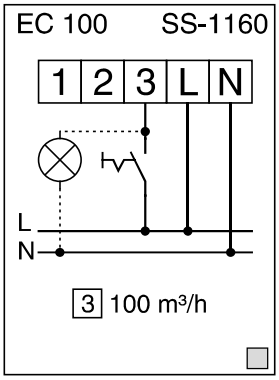

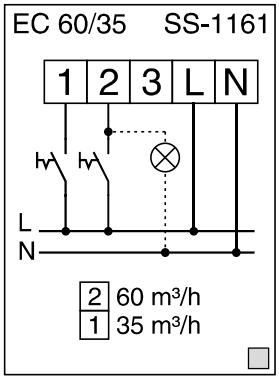

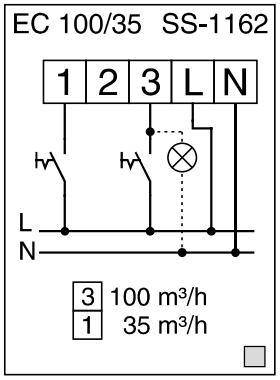

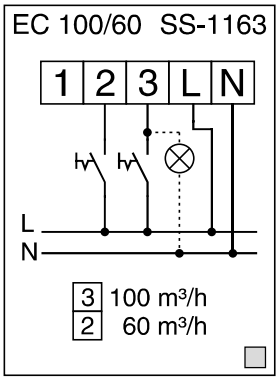

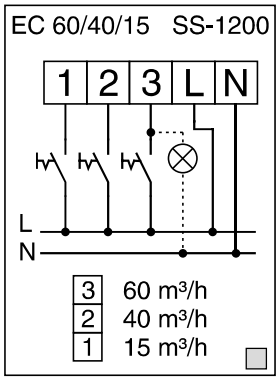

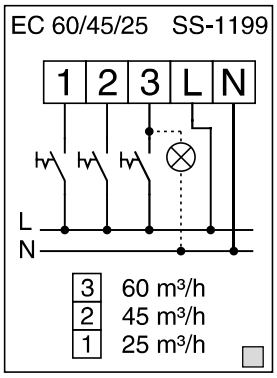

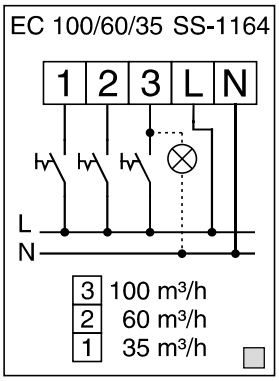

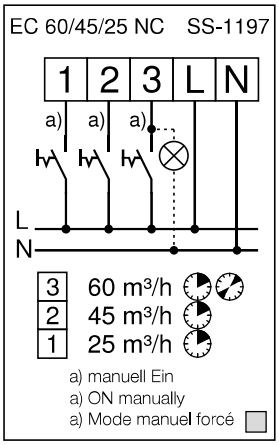

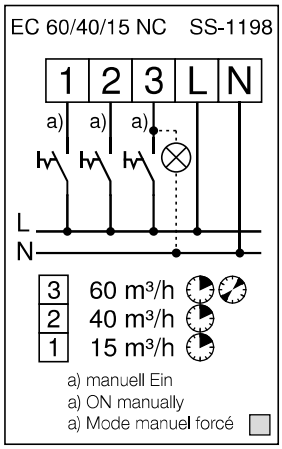

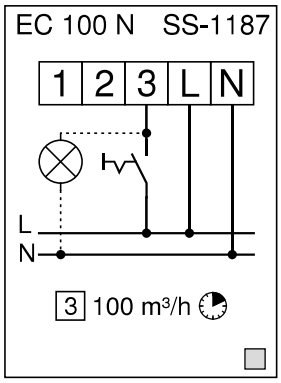

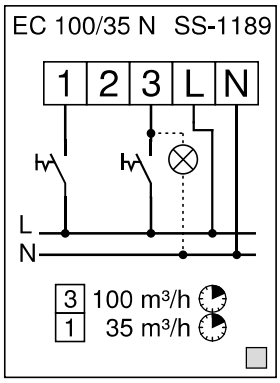

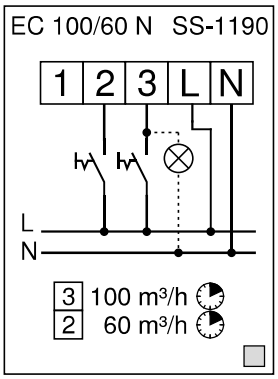

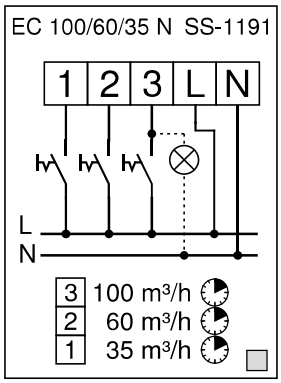

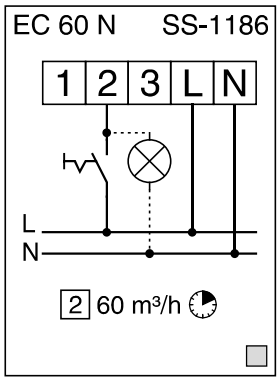

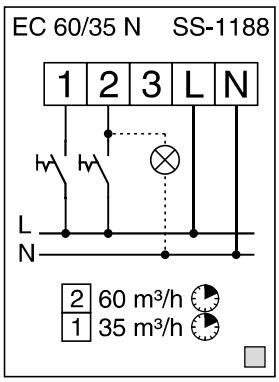

EN

EC 60 NC SS-1165

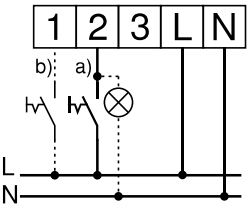

2 60 m³/h

a) manuell Ein
b) Automatik deaktivieren

a) ON manually
b) deactivate automatic

a) Mode manuel forcé
b) Désactivation du mode automatique

EC 100 NC SS-1166

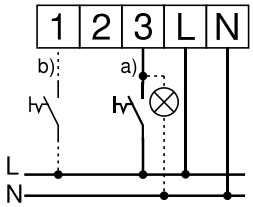

3 100 m³/h

a) manuell Ein
b) Automatik deaktivieren

a) ON manually
b) deactivate automatic

a) Mode manuel forcé
b) Désactivation du mode automatique

EC 60/35 NC SS-1167

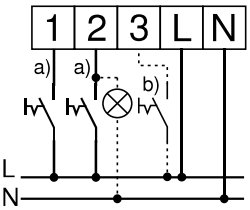

2 60 m³/h
1 35 m³/h

a) manuell Ein
b) Automatik deaktivieren

a) ON manually
b) deactivate automatic

a) Mode manuel forcé
b) Désactivation du mode automatique

EC 100/35 NC SS-1168

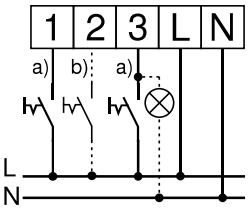

3 100 m³/h
1 35 m³/h

a) manuell Ein
b) Automatik deaktivieren

a) ON manually
b) deactivate automatic

a) Mode manuel forcé
b) Désactivation du mode automatique

EC 100/60 NC SS-1169

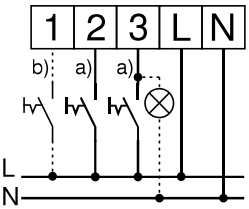

3 100 m³/h
2 60 m³/h

a) manuell Ein
b) Automatik deaktivieren

a) ON manually
b) deactivate automatic

a) Mode manuel forcé
b) Désactivation du mode automatique

EC 100/60/35 NC SS-1170

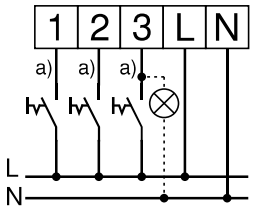

3 100 m³/h
2 60 m³/h
1 35 m³/h

a) manuell Ein
a) ON manually
a) Mode manuel forcé

EC 60 F SS-1171

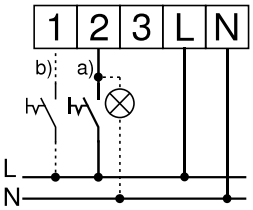

2 60 m³/h

a) manuell Ein
b) Automatik deaktivieren

a) ON manually
b) deactivate automatic

a) Mode manuel forcé
b) Désactivation du mode automatique

EC 100 F SS-1172

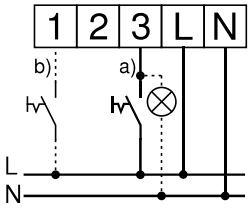

3 100 m³/h

a) manuell Ein
b) Automatik deaktivieren

a) ON manually
b) deactivate automatic

a) Mode manuel forcé
b) Désactivation du mode automatique

EC 60/35 F SS-1173

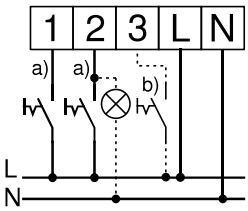

2 60 m³/h
1 35 m³/h

a) manuell Ein
b) Automatik deaktivieren

a) ON manually
b) deactivate automatic

a) Mode manuel forcé
b) Désactivation du mode automatique

EC 100/35 F SS-1174

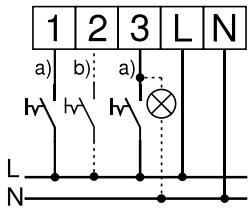

3 100 m³/h
1 35 m³/h

a) manuell Ein
b) Automatik deaktivieren

a) ON manually
b) deactivate automatic

a) Mode manuel forcé
b) Désactivation du mode automatique

EC 100/60 F SS-1175

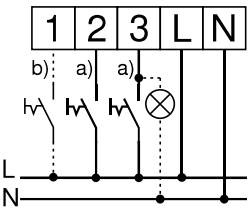

3 100 m³/h
2 60 m³/h

a) manuell Ein
b) Automatik deaktivieren

a) ON manually
b) deactivate automatic

a) Mode manuel forcé
b) Désactivation du mode automatique

EC 60/40/15 F SS-1213

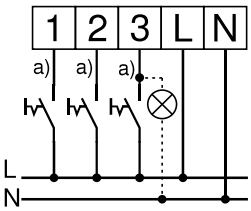

3 60 m³/h
2 40 m³/h
1 15 m³/h

a) manuell Ein
a) ON manually
a) Mode manuel forcé

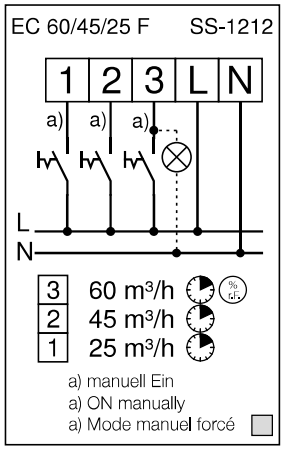
EC 60/45/25 F SS-1212
1 2 3 L N
a) a) a)
L
N
3 60 m³/h
2 45 m³/h
1 25 m³/h
a) manuell Ein
a) ON manually
a) Mode manuel forcé

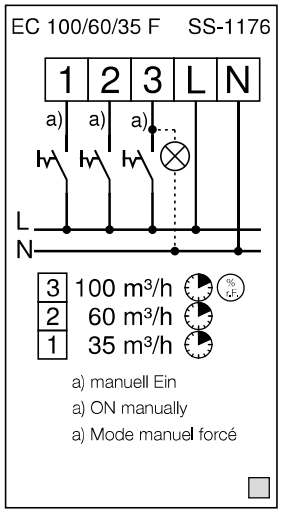
EC 100/60/35 F SS-1176
1 2 3 L N
a) a) a)
L
N
3 100 m³/h
2 60 m³/h
1 35 m³/h
a) manuell Ein
a) ON manually
a) Mode manuel forcé

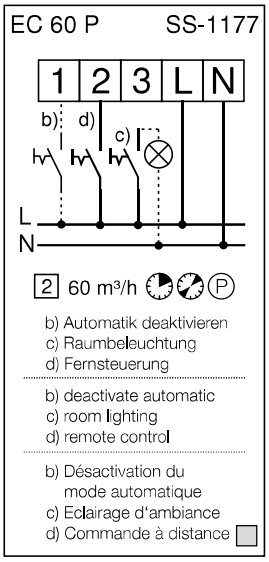
EC 60 P SS-1177
1 2 3 L N
b) d) c)
L
N
2 60 m³/h
P
b) Automatik deaktivieren
c) Raumbeleuchtung
d) Fernsteuerung
b) deactivate automatic
c) room lighting
d) remote control
b) Désactivation du mode automatique
c) Eclairage d'ambiance
d) Commande à distance

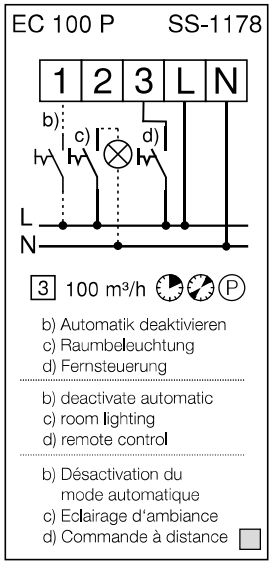
EC 100 P SS-1178
1 2 3 L N
b) c) d)
L
N
3 100 m³/h
P
b) Automatik deaktivieren
c) Raumbeleuchtung
d) Fernsteuerung
b) deactivate automatic
c) room lighting
d) remote control
b) Désactivation du mode automatique
c) Eclairage d'ambiance
d) Commande à distance

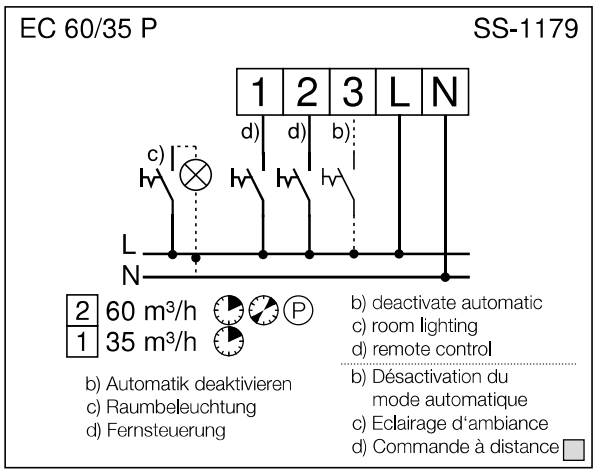
EC 60/35 P SS-1179
1 2 3 L N
d) d) b)
c)
L
N
2 60 m³/h
1 35 m³/h
P
b) Automatik deaktivieren
c) Raumbeleuchtung
d) Fernsteuerung
b) deactivate automatic
c) room lighting
d) remote control
b) Désactivation du mode automatique
c) Eclairage d'ambiance
d) Commande à distance

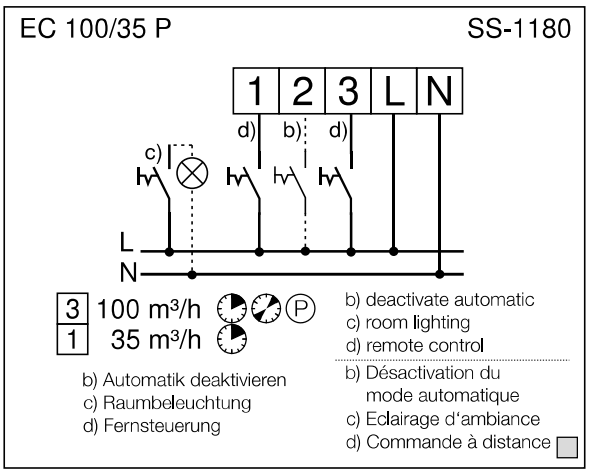
EC 100/35 P SS-1180
1 2 3 L N
d) b) d)
c)
L
N
3 100 m³/h
1 35 m³/h
P
b) Automatik deaktivieren
c) Raumbeleuchtung
d) Fernsteuerung
b) deactivate automatic
c) room lighting
d) remote control
b) Désactivation du mode automatique
c) Eclairage d'ambiance
d) Commande à distance

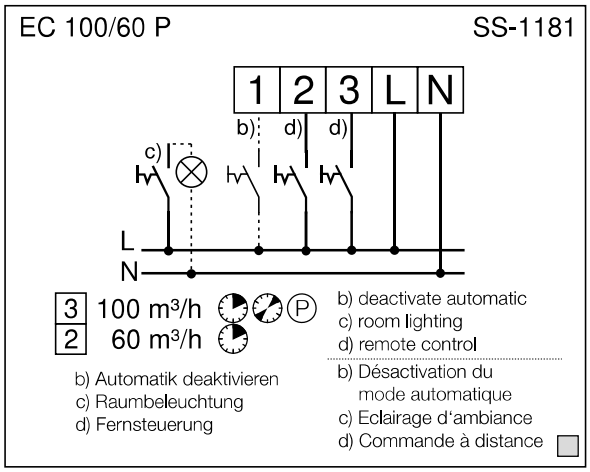
EC 100/60 P SS-1181
1 2 3 L N
b) d) d)
c)
L
N
3 100 m³/h
2 60 m³/h
P
b) Automatik deaktivieren
c) Raumbeleuchtung
d) Fernsteuerung
b) deactivate automatic
c) room lighting
d) remote control
b) Désactivation du mode automatique
c) Eclairage d'ambiance
d) Commande à distance

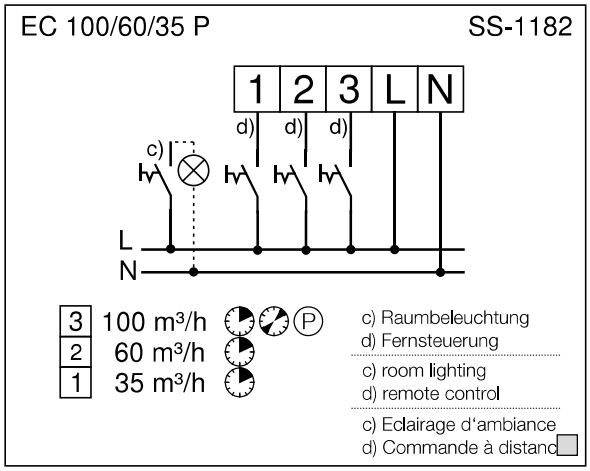
EC 100/60/35 P SS-1182
1 2 3 L N
d) d) d)
c)
L
N
3 100 m³/h
2 60 m³/h
1 35 m³/h
P
c) Raumbeleuchtung
d) Fernsteuerung
c) room lighting
d) remote control
c) Eclairage d'ambiance
d) Commande à distanc

EN

ELS EC.. with thermo-electric overrun timer ZT

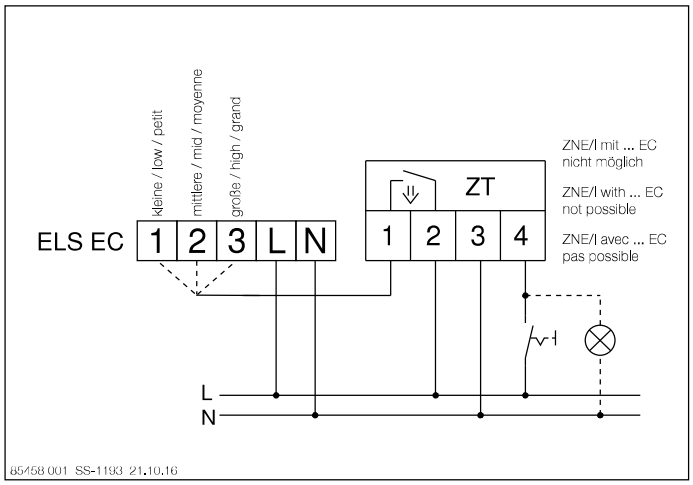

ELS EC.. with speed/operating switch DSEL 2, two-speed with timer function

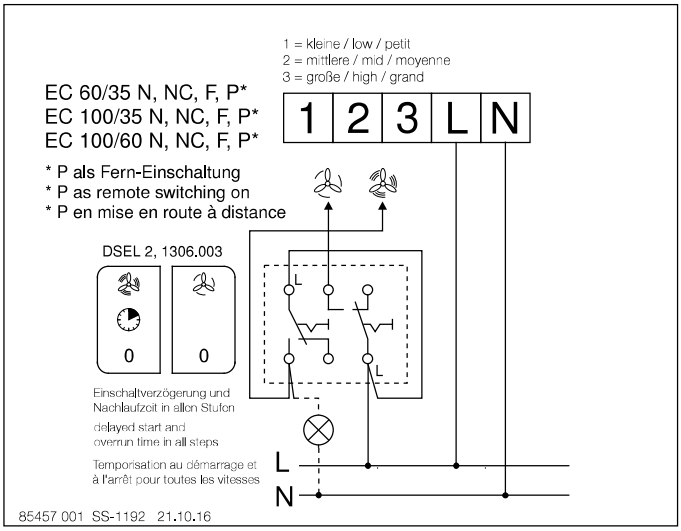

ELS EC.. with connection to second room

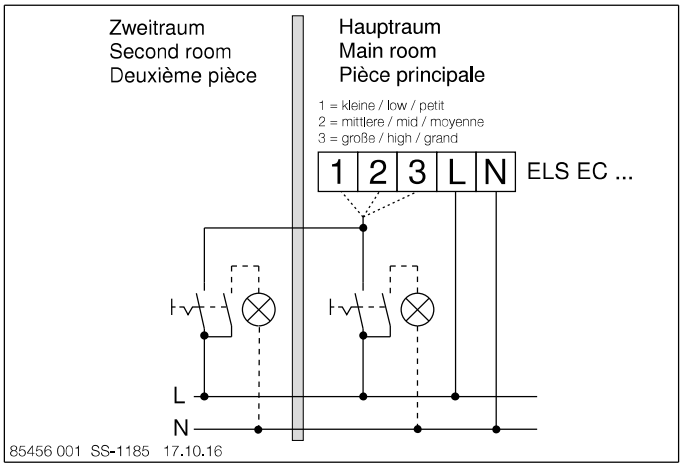

ELS EC.. with speed/operating switch DSEL 3, all three-speed

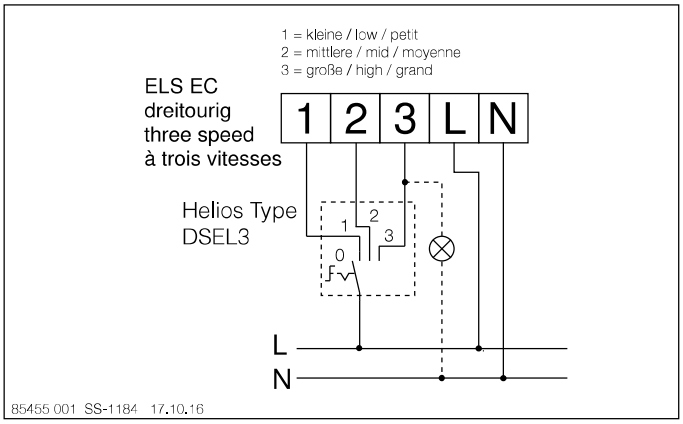

ELS EC.. with speed/operating switch DSEL 2, two-speed without timer function

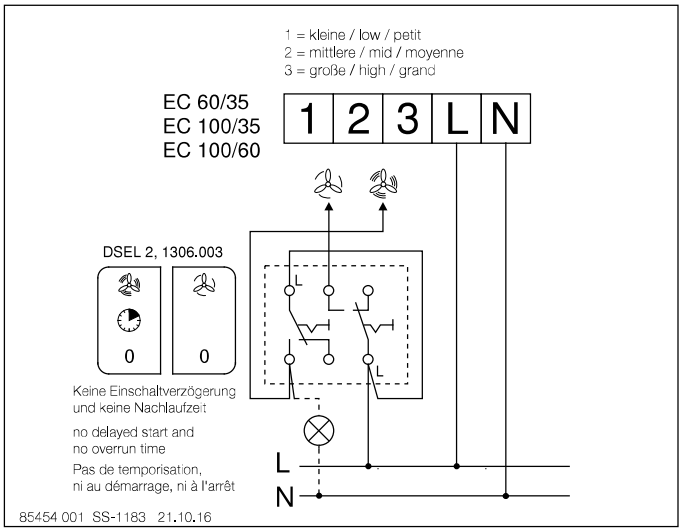

ELS EC.. with WSUP

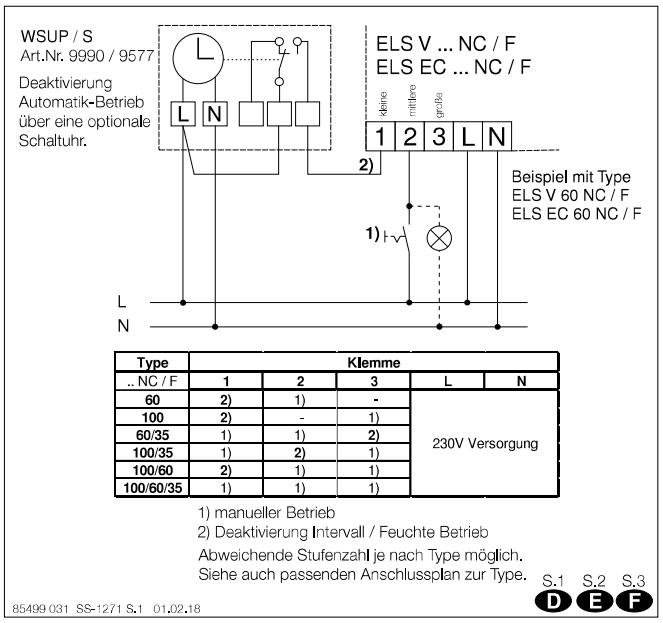

Type	Klemme				
.. NC / F	1	2	3	L	N
60	2)	1)	-	230V Versorgung	
100	2)	-	1)		
60/35	1)	1)	2)		
100/35	1)	2)	1)		
100/60	2)	1)	1)		
100/60/35	1)	1)	1)		

1) manueller Betrieb
2) Deaktivierung Intervall / Feuchte Betrieb
Abweichende Stufenzahl je nach Type möglich.
Siehe auch passenden Anschlussplan zur Type.

Als Referenz am Gerät griffbereit aufbewahren! Druckschrift-Nr.
Please keep this manual for reference with the unit! Print no. 19101-003/1018

www.heliosventilatoren.de

Service und Information

D HELIOS Ventilatoren GmbH & Co · Lupfenstraße 8 · 78056 VS-Schwenningen
CH HELIOS Ventilatoren AG · Tannstrasse 4 · 8112 Otelfingen
A HELIOS Ventilatoren · Postfach 854 · Siemensstraße 15 · 6023 Innsbruck
F HELIOS Ventilateurs · Le Carré des Aviateurs · 157 av. Charles Floquet · 93155 Le Blanc Mesnil Cedex
GB HELIOS Ventilation Systems Ltd. · 5 Crown Gate · Wyncolls Road · Severalls Industrial Park · Colchester · Essex · CO4 9HZ