TENMAT FIREFLY 109
VENT DUCT FIRE SLEEVES

THE QUEEN'S AWARDS FOR ENTERPRISE: INNOVATION 2012

The Firefly 109 Vent Duct Fire Sleeves provide up to **2 Hours Fire Resistance** to rectangular PVC ventilation ducting penetrations.

The Firefly 109 Vent Duct Fire Sleeves are fire tested to **BS 476 & EN 1366-3:2009**, the accepted British & European wide fire test standard required to meet UK Building Regulations.

The latest EN fire testing was carried out using the Uncapped/Uncapped (U/U) pipe / duct end configuration as required for ventilated systems.

The Firefly 109 Vent Duct Fire Sleeves are particularly suitable for use in plasterboard partitions, but can be used in blockwork walls.

The Sleeves **do not require any additional metal sleeving**. The unique intumescent material is vacuum formed to shape which ensures controlled sealing of the vent duct.

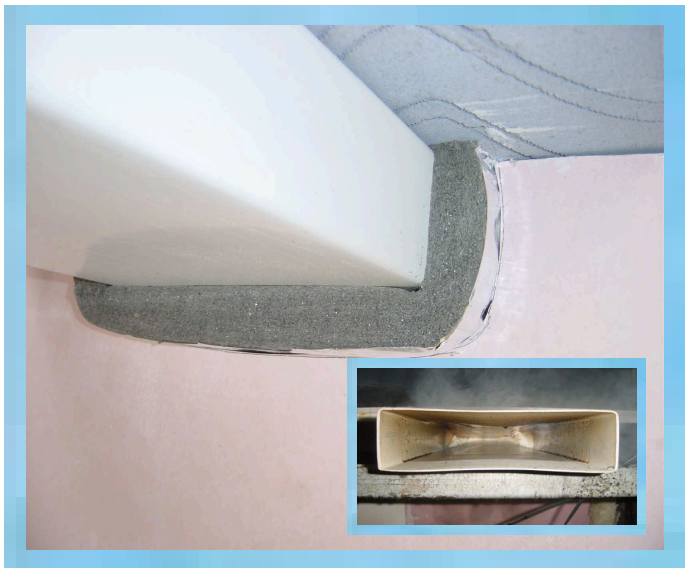

Vent Duct Fire Sleeve Installed Under Ceiling Soffit
Inset shows Duct sealed by the Fire Sleeve in a Fire

Vent Duct Fire Sleeve prior to installation

Key Features & Customer Benefits

- 30, 60 & 120 Minute Fire Rated
  - Integrity & Insulation
- Assessed for installation in:
  - Plasterboard clad steel or timber stud partitions
  - Masonry Walls & Floors
- Simple & quick to install, no screws or support needed
- No Metal Sleeving required
- Available to fit most common vent duct sizes
- Can be fitted tightly against ceiling soffit by removing the top side
- Assessed for use in series around multiple duct penetrations

TEST DATA

Fire Testing

The Firefly 109 Vent Duct Fire Sleeves are tested to **BS EN 1366-3: 2009** & **BS 476: Part 20: 1987**

Constructions covered:

Plasterboard Partitions & Masonry Walls & Floors

Fire Rating:

EI120 (120 mins Integrity & Insulation)

Report No.'s:

RF10167, IF11007, IF10066, IF05055, IF06016 / Chiltern Int. Fire

PAR/11078/01—IFC Assessment Report

FIREFLY 109 VENT DUCT FIRE SLEEVES

Fitting Instructions

STEP ONE
For ducts fitted against ceiling soffit the top side of sleeve can be removed *, leaving three sides **

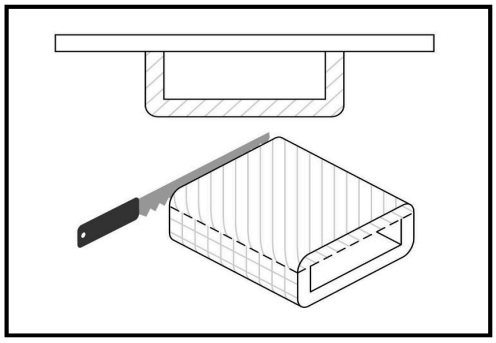

STEP TWO
The Fire Sleeve can be used to firestop multiple ducts in series. See Note 1 below for Multiple Ducts

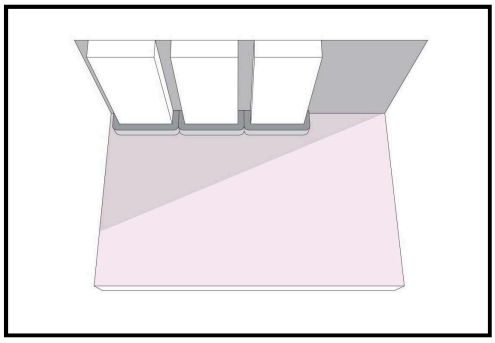

STEP THREE
For Fire Sleeves being fitted 4-sided, make a slit along sleeve length to allow fitting around pre-installed ducts

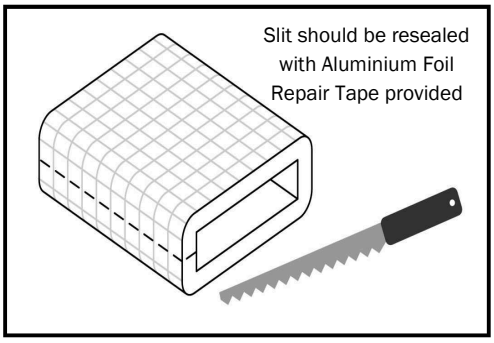

STEP FOUR
Use the Fire Sleeve as a template when cutting the plasterboard to provide a snug fit around the Fire Sleeve paying particular attention to the rounded corners ***

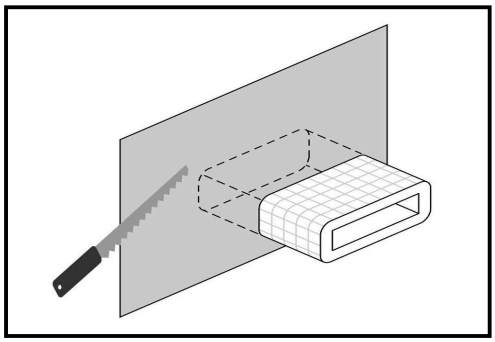

STEP FIVE
Slide Fire Sleeve until central within partition, the Fire Sleeve must protrude each side of partition by 25mm minimum

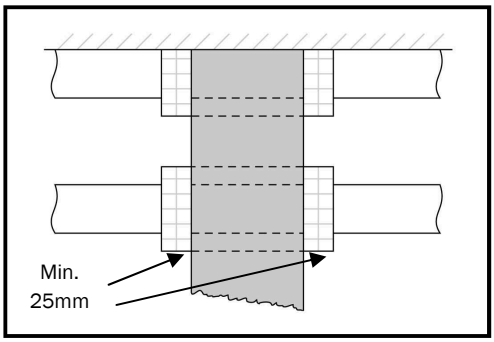

STEP SIX
Plasterboard should be a snug fit, however any gaps (up to 5mm) should be sealed with intumescent sealant

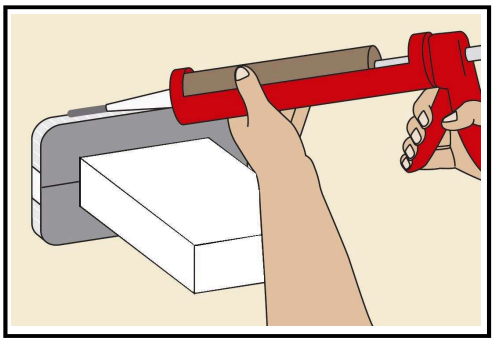

Note 1 - Multiple Duct Penetrations

The Fire Sleeve is approved for up to 3No. Fire Sleeves to be installed 'side-by-side' around multiple duct penetrations such that the sides of the Fire Sleeves are in contact with each other. The above fitting instructions should be closely followed in all cases.

It is the responsibility of the installer to ensure the partition stud / head track will continue to offer the necessary support / fixity to maintain the necessary partition performance.

Notes

* When removing the top side ensure both sides of the Fire Sleeve are of sufficient length to abut the ceiling soffit once installed around Vent Duct

** If the Fire Sleeve is installed prior to the partition, it can either be mechanically held in position with a steel strap / steel stud or taped to the Vent Duct with aluminium tape to hold in position prior to the partition being installed

*** Fire Sleeves fitted against the ceiling soffit should have the top side removed before using as a template, the Fire Sleeve is compressible to allow a snug fit to be achieved when fitting within the plasterboard partition, any gaps (up to 5mm) should be sealed with intumescent sealant

Sizes Available

The Vent Duct Fire Sleeves are available to suit the following Vent Duct Sizes:

110 x 54 mm
150 x 70 mm
204 x 60 mm
234 x 29 mm
308 x 29 mm
Ø 100 mm
Ø 125 mm

For other sizes please contact TENMAT.

Agent / Distributor

For more information on the range of TENMAT Fire Protection Products please contact:

TENMAT LTD
Ashburton Road West,
Trafford Park, Manchester M17 1RU, UK
Telephone: +44 (0)161 872 2181
Fax: +44 (0)161 872 7596
Website: www.tenmat.com E-mail: info@tenmat.com

TENMAT

Issue 08/11